DYCARTEC
J.L. van Osstraat 7
1271 KB Huizen
the Netherlands
T+31 (0)35 52 353 25
F+31 (0)35 52 353 26
E info@dycartec.nl
www.dycartec.nl

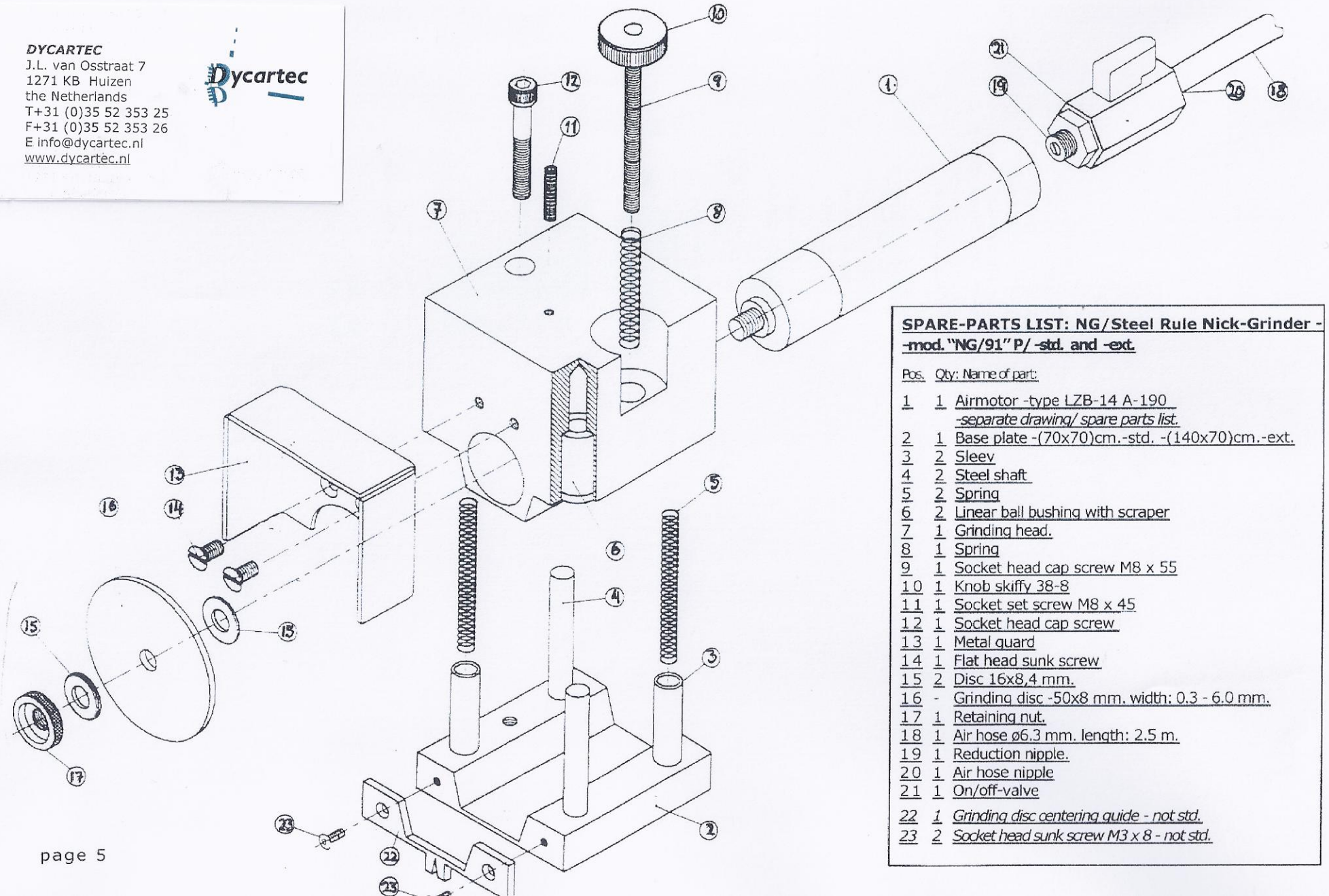

SPARE-PARTS LIST: NG/Steel Rule Nick-Grinder - -mod. "NG/91" P/ -std. and -ext.

Pos.	Qty:	Name of part:
1	1	Airmotor -type LZB-14 A-190 *-separate drawing/ spare parts list.*
2	1	Base plate -(70x70)cm.-std. -(140x70)cm.-ext.
3	2	Sleev
4	2	Steel shaft
5	2	Spring
6	2	Linear ball bushing with scraper
7	1	Grinding head.
8	1	Spring
9	1	Socket head cap screw M8 x 55
10	1	Knob skiffy 38-8
11	1	Socket set screw M8 x 45
12	1	Socket head cap screw
13	1	Metal guard
14	1	Flat head sunk screw
15	2	Disc 16x8,4 mm.
16	-	Grinding disc -50x8 mm. width: 0.3 - 6.0 mm.
17	1	Retaining nut.
18	1	Air hose ø6.3 mm. length: 2.5 m.
19	1	Reduction nipple.
20	1	Air hose nipple
21	1	On/off-valve
22	*1*	*Grinding disc centering guide - not std.*
23	*2*	*Socket head sunk screw M3 x 8 - not std.*